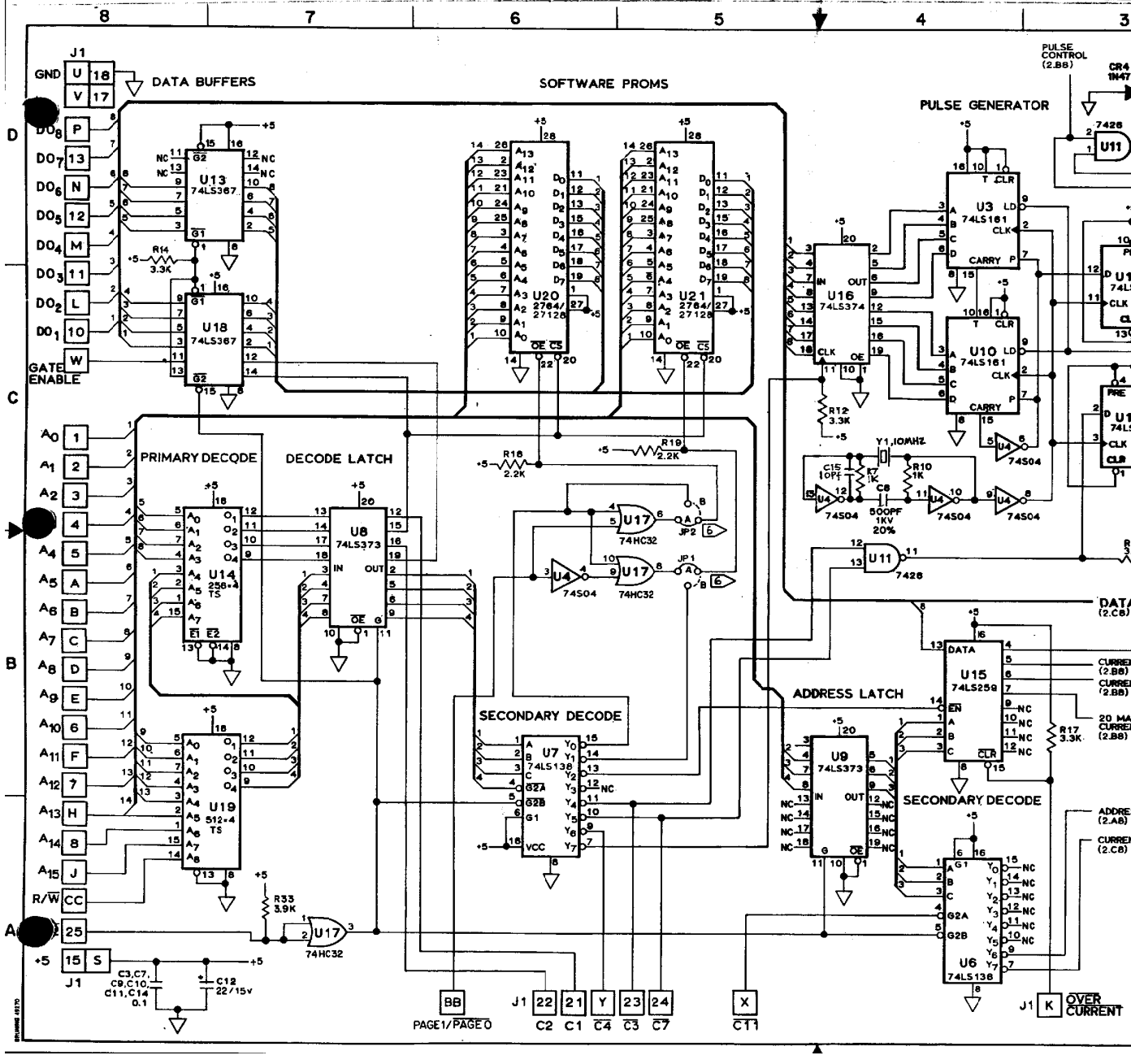

REVISIONS					
LTR	DESCRIPTION	DR	CHK	APPR'D	DATE
A	RELEASE	MPY AK			4/82
B	ECN 4760	CL		CTJ	2/83
C	ECN 4768	CL		CTJ	2/83
D	ECN 4827	CL		CTJ	5/83
E	ECN 4889	BV		CTJ	4/84
F	INCORP. ADCN E1 PER ECP 0156	SH		CTJ	6/85

NOTES: UNLESS OTHERWISE SPECIFIED.

1. RESISTORS ARE 1/4W AND IN OHMS, 5%
2. CAPACITORS ARE 50V AND IN MICROFARADS 10%.
3. LAST REFERENCE DESIGNATORS USED:
   R33, C15, CR4, VR3, U23, Q3, Y1, JP2
   REFERENCE DESIGNATORS NOT USED:
   U1, R22, R23
4. CONNECTIONS NOT SHOWN:

I.C. NO.	+5	GND
U4	14	7
U11	14	7
U17	14	7

5. UNUSED GATES:

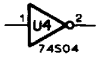

6 -004 INSTALL JP1 AND JP2 IN POSITION A.

P/N 702-1650-004

APPROVALS:	UNLESS OTHERWISE SPECIFIED DIMENSIONS ARE IN INCHES.	DATA I/O
DSN. ENGR. / MFG. ENGR.	TOLERANCES, UNLESS OTHERWISE SPECIFIED: .XX ±, .XXX ±, ANGULAR	TITLE SCHEMATIC DIAGRAM, MEMORY BOARD
QUAL. ASSUR. / ENGR. MGR.	DRAWN BY: KONG / CHECKED BY: BK. CHK: BJL	SIZE D / CODE IDENT. NO. 54193 / DRAWING NO. 30-702-1650
		SCALE NONE / SHEET 1 OF 2

REVISIONS					
LTR	DESCRIPTION	DR	CHK	APPR'D	DATE
F	SEE SHEET ONE				

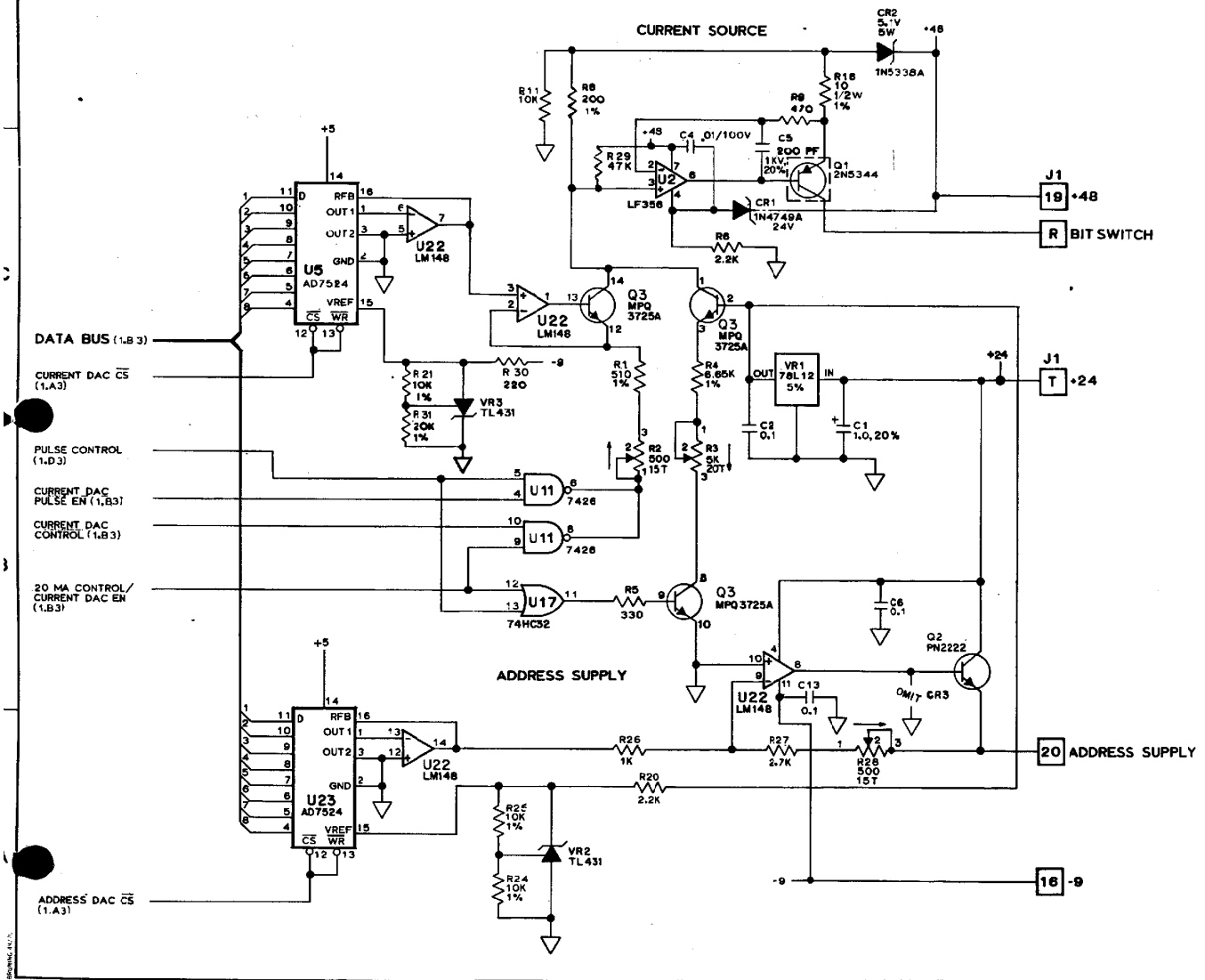

APPROVALS:		UNLESS OTHERWISE SPECIFIED DIMENSIONS ARE IN INCHES.		DATA I/O	
DSN. ENGR.	DATE	TOLERANCES, UNLESS OTHERWISE SPECIFIED: .XX ± .XXX ANGULAR		TITLE SCHEMATIC DIAGRAM, MEMORY BOARD	
MFG. ENGR.	DATE				
QUAL. ASSUR.	DATE	DRAWN BY: KONG	DATE 6/22/82	SIZE D	CODE IDENT. NO. 54193	DRAWING NO. 30-702-1650
ENGR. MGR.	DATE	CHECKED BY:	DATE	SCALE NONE	SHEET 2 OF 2

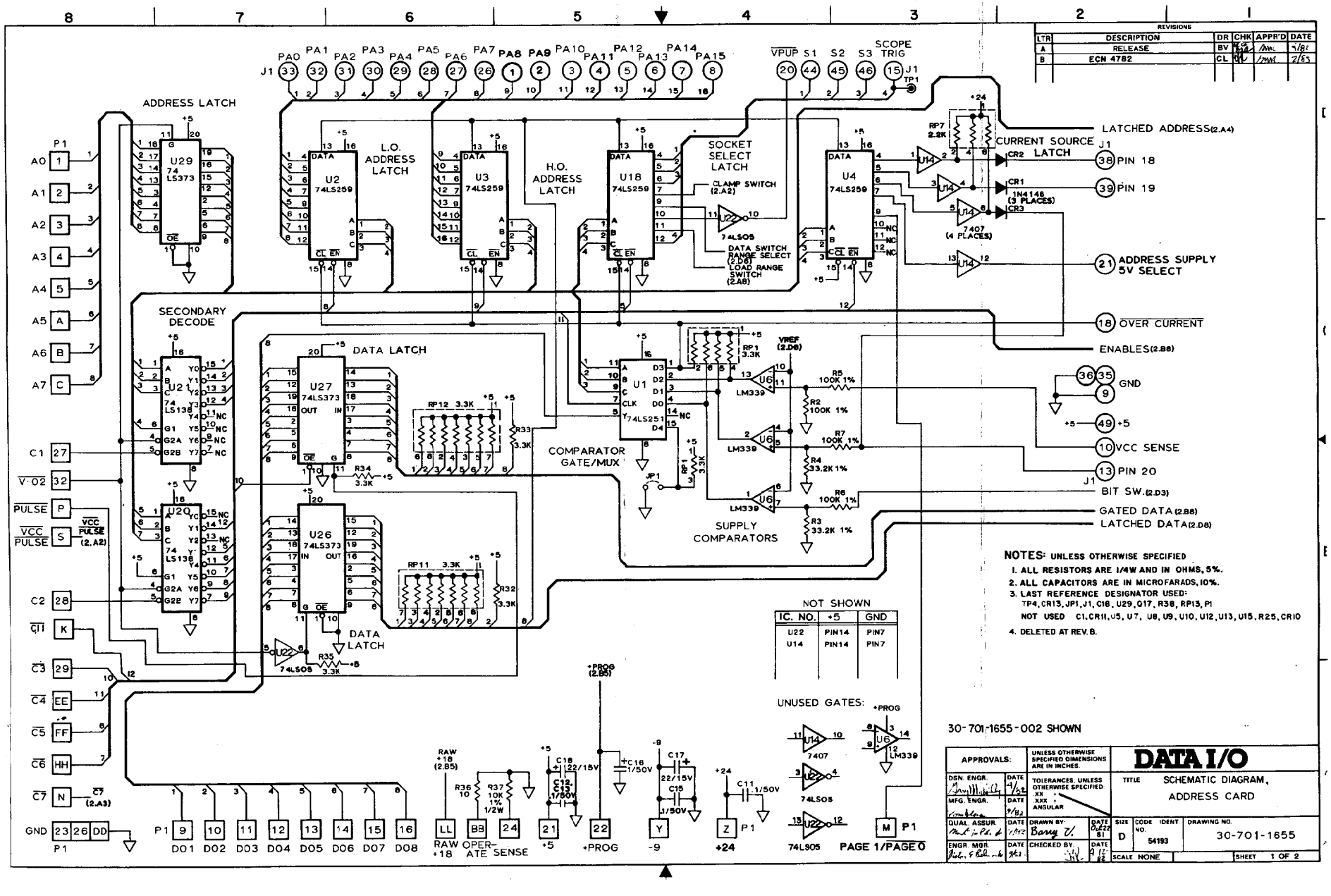
ADDRESS LATCH
U29 74 LS373
L.O. ADDRESS LATCH
U2 74LS259
U3 74LS259
H.O. ADDRESS LATCH
U18 74LS259
SOCKET SELECT LATCH
U4 74LS259
CLAMP SWITCH (2.A2)
DATA SWITCH RANGE SELECT (2.D6)
LOAD RANGE SWITCH (2.A8)
CURRENT SOURCE LATCH
LATCHED ADDRESS(2.A4)
PIN 18
PIN 19
ADDRESS SUPPLY 5V SELECT
OVER CURRENT
ENABLES(2.B8)
GND
VCC SENSE
PIN 20
BIT SW.(2.D3)
GATED DATA(2.B8)
LATCHED DATA(2.D8)
SECONDARY DECODE
U21 74 LS138
U20 74 LS138
DATA LATCH
U27 74LS373
U26 74LS373
COMPARATOR GATE/MUX
U1 74LS251
SUPPLY COMPARATORS
LM339
NOTES: UNLESS OTHERWISE SPECIFIED
1. ALL RESISTORS ARE 1/4W AND IN OHMS, 5%.
2. ALL CAPACITORS ARE IN MICROFARADS, 10%.
3. LAST REFERENCE DESIGNATOR USED:
TP4, CR13, JP1, J1, C16, U29, Q17, R38, RP13, P1
NOT USED C1, CR11, U5, U7, U8, U9, U10, U12, U13, U15, R25, CR10
4. DELETED AT REV. B.
NOT SHOWN
IC. NO. +5 GND
U22 PIN14 PIN7
U14 PIN14 PIN7
UNUSED GATES:
30-701-1655-002 SHOWN
PAGE 1/PAGE 0
DATA I/O
SCHEMATIC DIAGRAM, ADDRESS CARD
30-701-1655
SCALE NONE
SHEET 1 OF 2

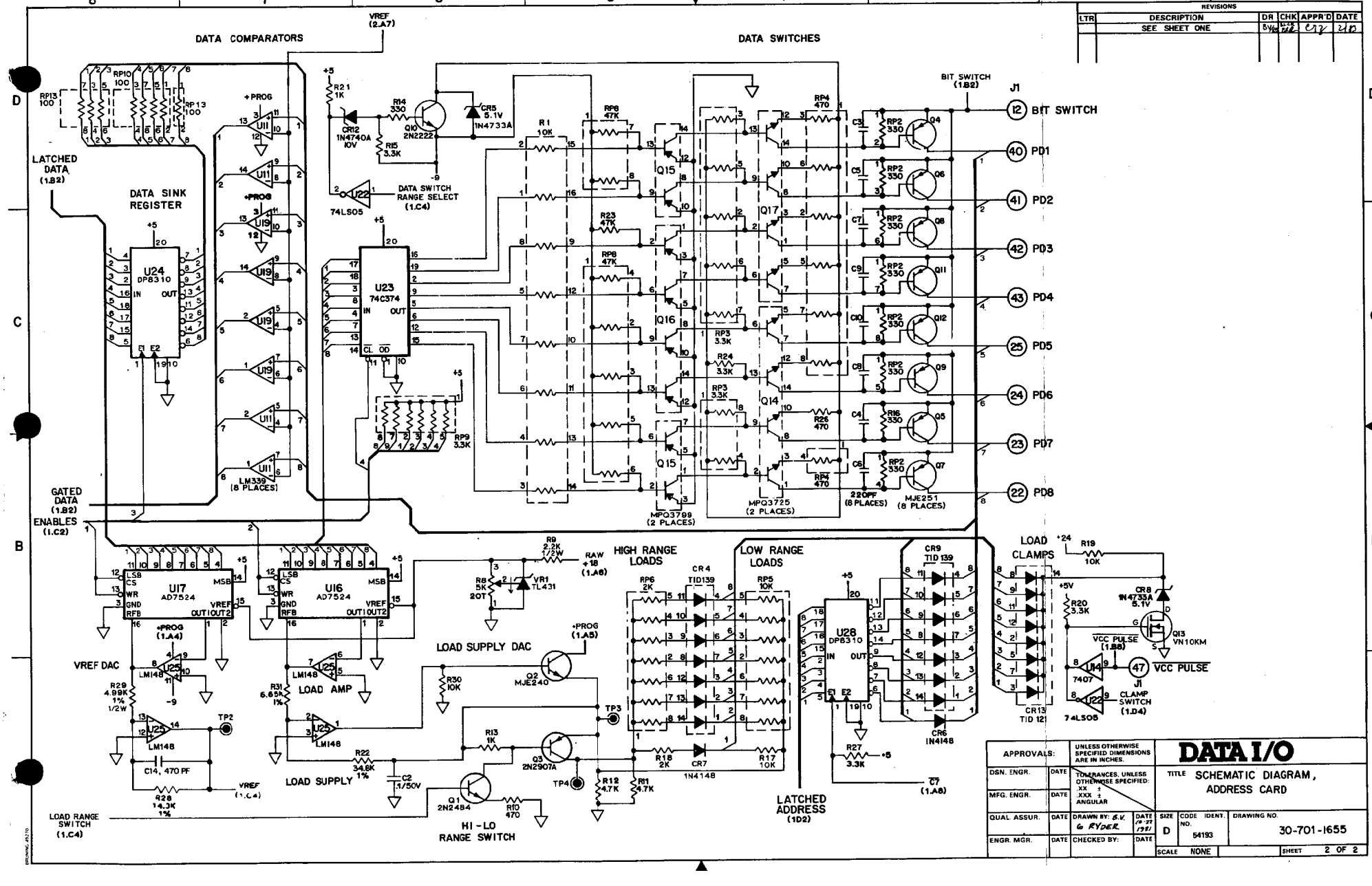
DATA COMPARATORS
DATA SWITCHES
VREF (2.A7)
DATA SINK REGISTER
U24 DP8310
U23 74C374
LATCHED DATA (1.B2)
GATED DATA (1.B2)
ENABLES (1.C2)
DATA SWITCH RANGE SELECT (1.C4)
74LS05
LM339 (8 PLACES)
MPQ3799 (2 PLACES)
MPQ3725 (2 PLACES)
MJE251 (8 PLACES)
BIT SWITCH (1.B2)
J1
BIT SWITCH
PD1
PD2
PD3
PD4
PD5
PD6
PD7
PD8
U17 AD7524
U16 AD7524
VREF DAC
LOAD AMP
LOAD SUPPLY
LOAD SUPPLY DAC
HI-LO RANGE SWITCH
LOAD RANGE SWITCH (1.C4)
HIGH RANGE LOADS
LOW RANGE LOADS
LATCHED ADDRESS (1D2)
U28 DP8310
LOAD CLAMPS
VCC PULSE (1.B5)
VCC PULSE
CLAMP SWITCH (1.D4)
74LS05
7407
REVISIONS
LTR
DESCRIPTION
SEE SHEET ONE
DR
CHK
APPR'D
DATE
APPROVALS:
UNLESS OTHERWISE SPECIFIED DIMENSIONS ARE IN INCHES.
TOLERANCES, UNLESS OTHERWISE SPECIFIED: .XX ± .XXX ± ANGULAR
DSN. ENGR.
MFG. ENGR.
QUAL. ASSUR.
ENGR. MGR.
DRAWN BY: B.V. G. RYDER
CHECKED BY:
DATA I/O
TITLE SCHEMATIC DIAGRAM, ADDRESS CARD
SIZE D
CODE IDENT. NO. 54193
DRAWING NO. 30-701-1655
SCALE NONE
SHEET 2 OF 2

REVISIONS					
LTR	DESCRIPTION	DR	CHK	APPR'D	DATE
A	RELEASE	HP		DS	11/15/84

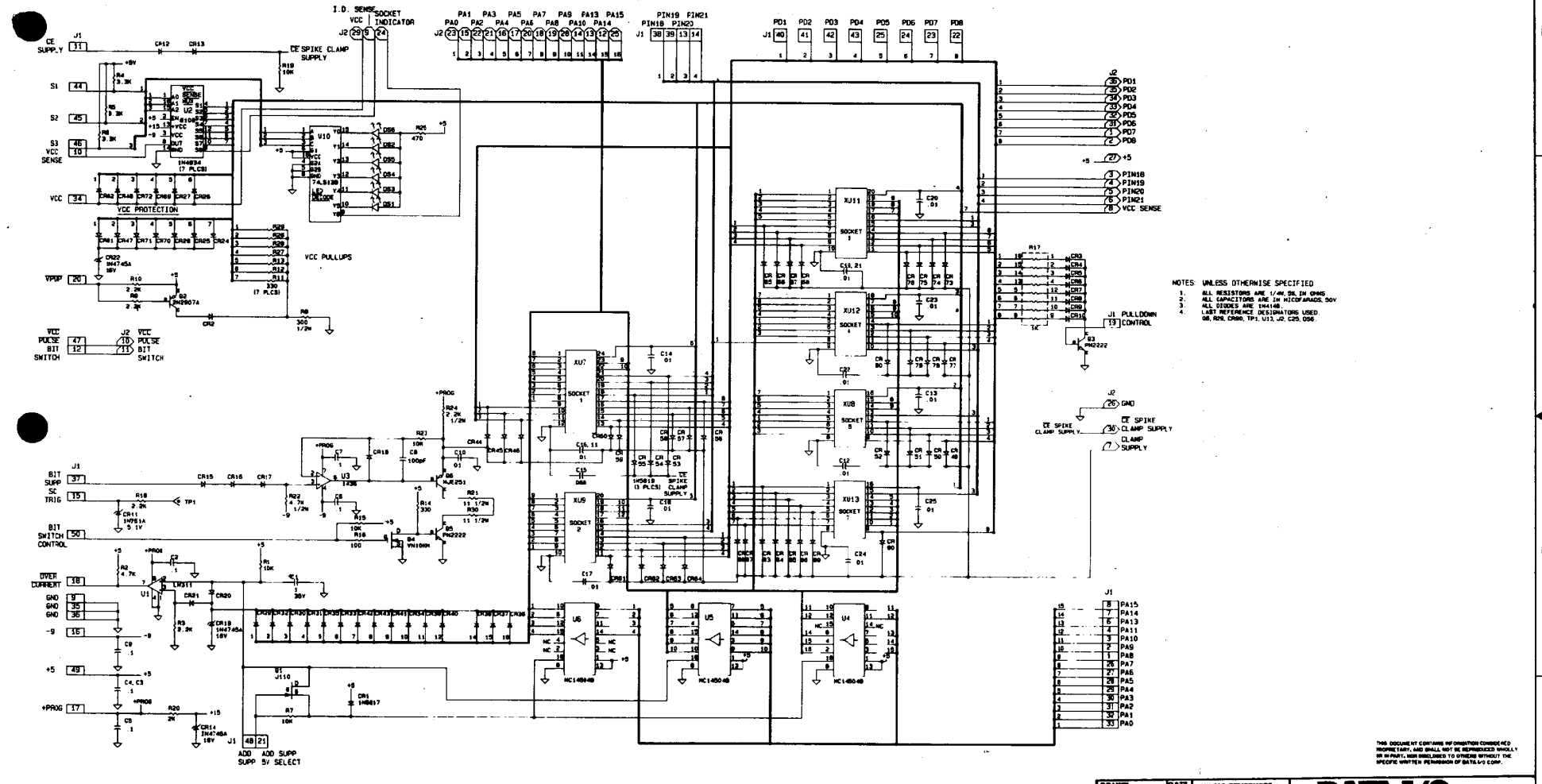

NOTES: UNLESS OTHERWISE SPECIFIED
1. ALL RESISTORS ARE 1/4W, 5%, IN OHMS
2. ALL CAPACITORS ARE IN MICROFARADS, 50V
3. ALL DIODES ARE 1N4148.
4. LAST REFERENCE DESIGNATORS USED: Q8, R29, CR90, TP1, U13, J2, C25, D96.

THIS DOCUMENT CONTAINS INFORMATION CONSIDERED PROPRIETARY, AND SHALL NOT BE REPRODUCED WHOLLY OR IN PART, NOR DISCLOSED TO OTHERS WITHOUT THE SPECIFIC WRITTEN PERMISSION OF DATA I/O CORP.

P/N 701-0153-001

DRAWN V. PATTEE	DATE 11/84	UNLESS OTHERWISE SPECIFIED DIMENSIONS ARE IN INCHES.	DATA I/O REDMOND, WASH.
CHECKED	3/1/85	TOLERANCES, UNLESS OTHERWISE SPECIFIED: .XX ± .XXX ± ANGULAR	TITLE SCHEMATIC DIAGRAM UNIPAK II SOCKET BOARD
MECH ENG	4/1/85	DO NOT SCALE DRAWING	SIZE D · FSCM NO. 54153 · DRAWING NO. 30-701-0153
ELEC ENG	4/1/85		SCALE 1/1 · SHEET 1 OF 1
QUAL ASSUR	4/8/85		
APPD	4/8/85		

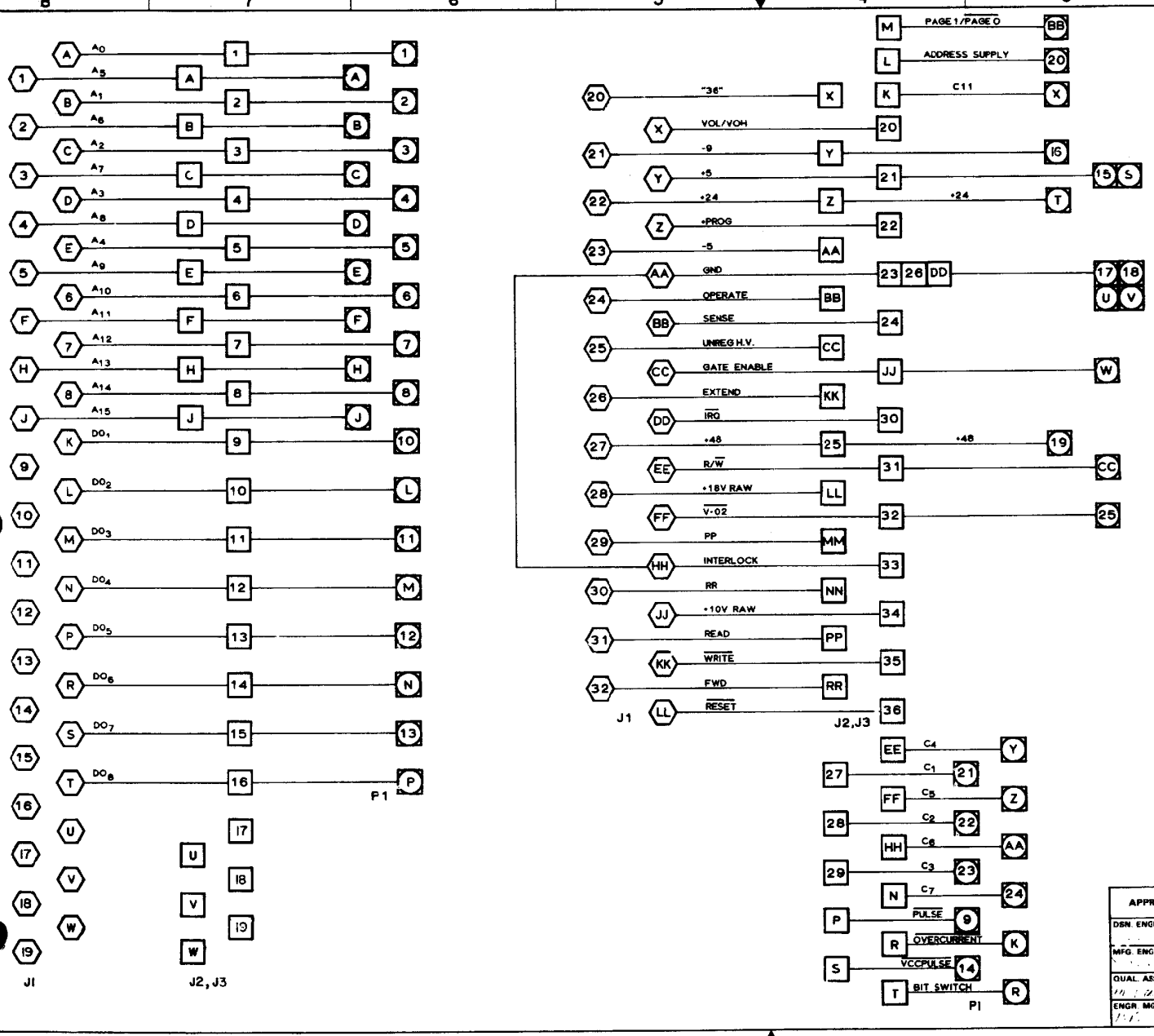

REVISIONS					
LTR	DESCRIPTION	DR	CHK	APPR'D	DATE
	RELEASE	R.B.			

APPROVALS	DATE	UNLESS OTHERWISE SPECIFIED DIMENSIONS ARE IN INCHES	DATA I/O	
DSN. ENGR.		TOLERANCES UNLESS OTHERWISE SPECIFIED .XX ± .XXX ± ANGULAR	TITLE SCHEMATIC DIAGRAM, MOTHERBOARD	
MFG. ENGR.				
QUAL. ASSUR.		DRAWN BY R. BENN	DATE 12-21-81	SIZE D / CODE IDENT. NO 54193 / DRAWING NO 30-702-1661
ENGR. MGR.		CHECKED BY	DATE	SCALE / SHEET 1 OF 1

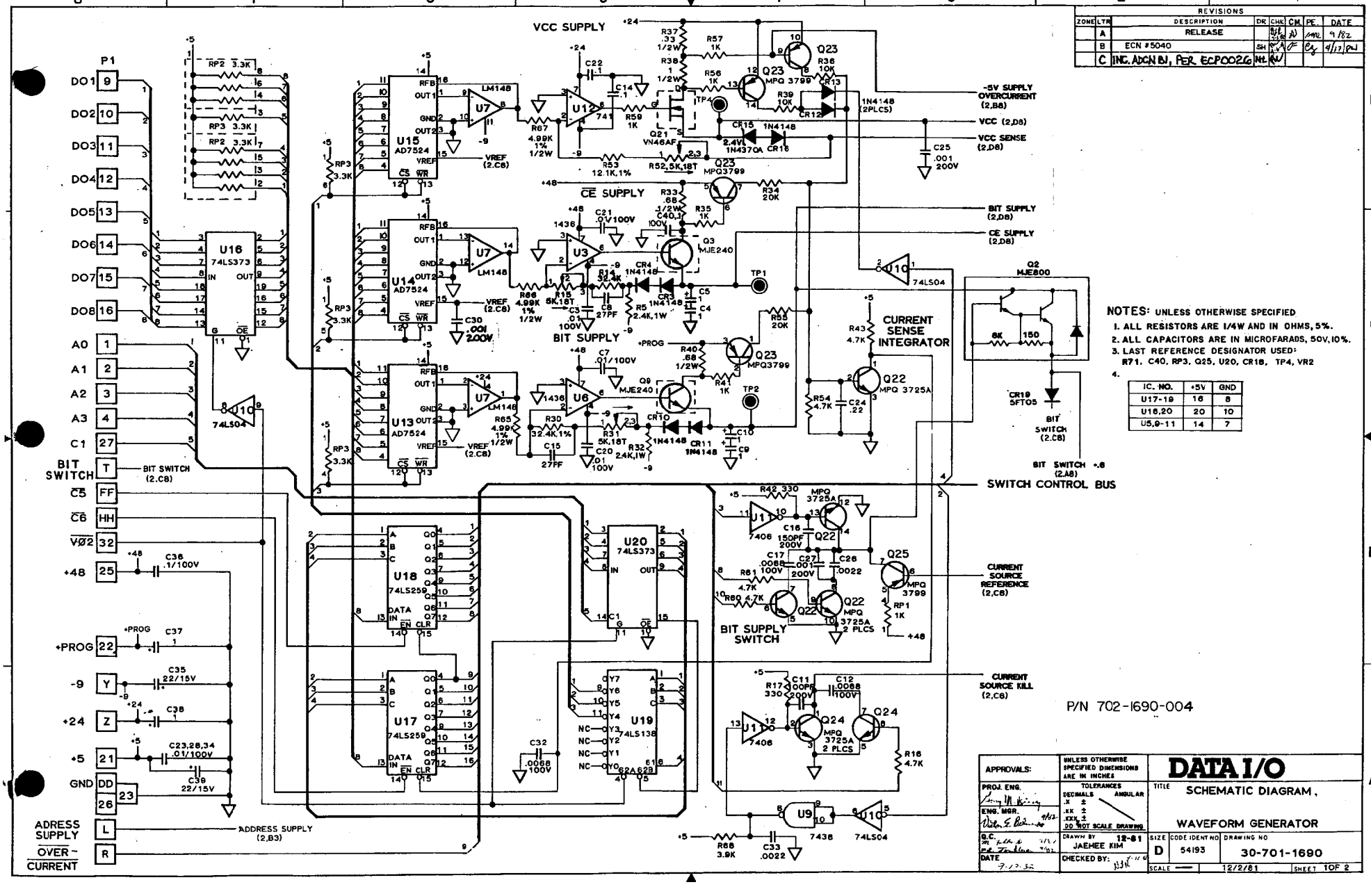

REVISIONS						
ZONE	LTR	DESCRIPTION	DR	CHK	CM	PE	DATE
	A	RELEASE					
	B	ECN #5040					
	C	INC. ADCN BJ, PER ECP0026					

NOTES: UNLESS OTHERWISE SPECIFIED
1. ALL RESISTORS ARE 1/4W AND IN OHMS, 5%.
2. ALL CAPACITORS ARE IN MICROFARADS, 50V, 10%.
3. LAST REFERENCE DESIGNATOR USED: R71, C40, RP3, Q25, U20, CR18, TP4, VR2
4.

IC. NO.	+5V	GND
U17-19	16	8
U16,20	20	10
U5,9-11	14	7

APPROVALS:
PROJ. ENG.
ENG. MGR.
Q.C.
DATE 9-12-82

UNLESS OTHERWISE SPECIFIED DIMENSIONS ARE IN INCHES
TOLERANCES
DECIMALS .X ± .XX ± .XXX ± ANGULAR ±
DO NOT SCALE DRAWING

DRAWN BY JAEHEE KIM 12-81
CHECKED BY:

DATA I/O

TITLE SCHEMATIC DIAGRAM, WAVEFORM GENERATOR

SIZE D | CODE IDENT NO 54193 | DRAWING NO 30-701-1690

SCALE — | 12/2/81 | SHEET 1 OF 2

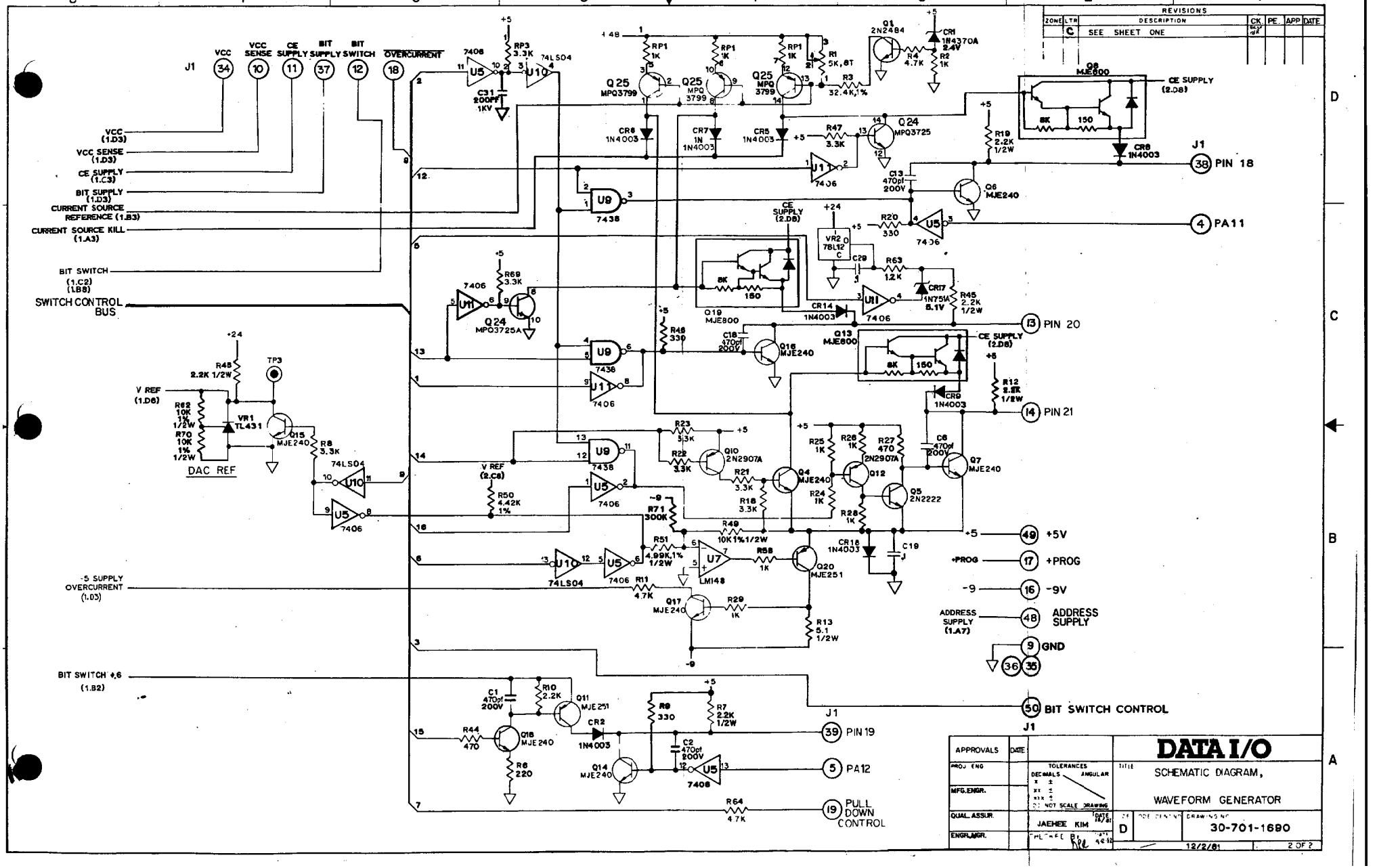
REVISIONS
ZONE LTR DESCRIPTION CK PE APP DATE
C SEE SHEET ONE
J1
VCC (1.D3)
VCC SENSE (1.D3)
CE SUPPLY (1.C3)
BIT SUPPLY (1.D3)
CURRENT SOURCE REFERENCE (1.B3)
CURRENT SOURCE KILL (1.A3)
BIT SWITCH (1.C2) (1.B8)
SWITCH CONTROL BUS
-5 SUPPLY OVERCURRENT (1.D3)
BIT SWITCH +6 (1.B2)
DAC REF
V REF (1.D6)
V REF (2.C6)
CE SUPPLY (2.D8)
PIN 18
PA11
PIN 20
PIN 21
+5V
+PROG
-9V
ADDRESS SUPPLY
GND
BIT SWITCH CONTROL
PIN 19
PA12
PULL DOWN CONTROL
DATA I/O
SCHEMATIC DIAGRAM,
WAVEFORM GENERATOR
30-701-1690
12/2/81
2 OF 2

REVISIONS					
LTR	DESCRIPTION	DR	CHK	APPR'D	DATE
A	RELEASE	MP	[illegible]	DS	4/2/5

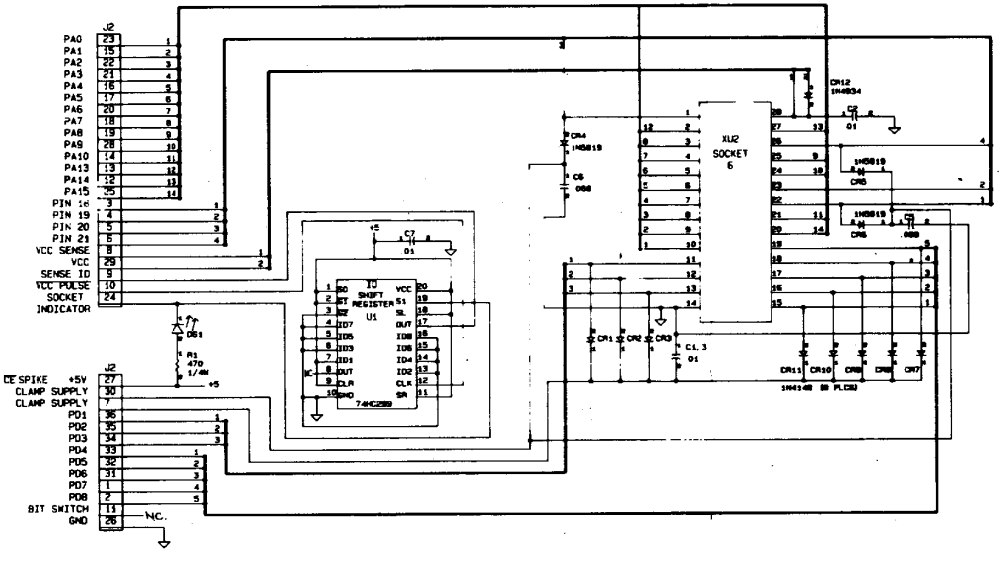

NOTES: UNLESS OTHERWISE SPECIFIED
1. ALL RESISTORS ARE 5% IN OHMS
2. ALL CAPACITORS ARE IN MICROFARADS.

P/N 701-0154-001

DRAWN	DATE 2/85	UNLESS OTHERWISE SPECIFIED DIMENSIONS ARE IN INCHES.
CHECKED		TOLERANCES, UNLESS OTHERWISE SPECIFIED: .XX ± .XXX ± ANGULAR
R-SC. ENG	4/1/85	
MECH. ENG	4/1/5	DO NOT SCALE DRAWING
MFG ENG	4/2/5	
QUAL ASSUR	4/2/5	
APPD	4/4/5	

DATA I/O REDMOND, WASH.

TITLE
SCHEMATIC DIAGRAM
UNIPAK II
PINOUT CARTRIDGE NO. 1

SIZE	FSCM NO.	DRAWING NO.
C	54193	30-701-0154

SCALE NONE SHEET 1 OF 1